DTC	P0011	Camshaft Position "A" - Timing Over-Advanced or System Performance (Bank 1)

DTC	P0012	Camshaft Position "A" - Timing Over-Retarded (Bank 1)

DESCRIPTION

HINT:
If DTC P0011 or P0012 is present, check the VVT (Variable Valve Timing) system.
Refer to DTC P0010 (See page ES-45).

DTC No.	DTC Detection Conditions	Trouble Areas
P0011	Advanced cam timing: With warm engine and engine speed of between 550 rpm and 4,000 rpm, all conditions (a), (b) and (c) are met (1 trip detection logic): (a) Difference between target and actual intake valve timings is more than 5°CA (Crankshaft Angle) for 4.5 seconds (b) Current intake valve timing is fixed (timing changes less than 5°CA in 5 seconds) (c) Variations in VVT controller timing are more than 19°CA of maximum delayed timing (advanced)	• Valve timing • Oil control valve (OCV) • OCV filter • Camshaft timing gear assembly • ECM
P0012	Retarded cam timing: With warm engine and engine speed of between 550 rpm and 4,000 rpm, all conditions (a), (b) and (c) are met (2 trip detection logic): (a) Difference between target and actual intake valve timings is more than 5°CA (Crankshaft Angle) for 4.5 seconds (b) Current intake valve timing is fixed (timing changes less than 5°CA in 5 seconds) (c) Variations in VVT controller timing are 19°CA or less of maximum delayed timing (retarded)	• Valve timing • OCV • OCV filter • Camshaft timing gear assembly • ECM

MONITOR DESCRIPTION

The ECM optimizes the intake valve timing using the VVT (Variable Valve Timing) system to control the intake camshaft. The VVT system includes the ECM, the Oil Control Valve (OCV) and the VVT controller. The ECM sends a target duty-cycle control signal to the OCV. This control signal regulates the oil pressure supplied to the VVT controller. The VVT controller can advance or retard the intake camshaft. If the difference between the target and actual intake valve timings is large, and changes in actual intake valve timing are small, the ECM interprets this as the VVT controller stuck malfunction and sets a DTC.
Example:
A DTC is set when the following conditions 1), 2) and 3) are met:
1) The difference between the target and actual intake valve timings is more than 5°CA (Crankshaft Angle) and the condition continues for more than 4.5 seconds.
2) It takes 5 seconds or more to change the valve timing by 5°CA.
3) After above conditions 1) and 2) are met, the OCV is forcibly activated 63 times or more.
DTC P0011 (Advanced Cam Timing) is subject to 1 trip detection logic.
DTC P0012 (Retarded Cam Timing) is subject to 2 trip detection logic.
These DTCs indicate that the VVT controller cannot operate properly due to OCV malfunctions or the presence of foreign objects in the OCV.
The monitor will not run unless the following conditions are met:
- The engine is warm (the engine coolant temperature is 75°C [167°F] or more).
- The vehicle has been driven at more than 40 mph (64 km/h) for 3 minutes.
- The engine has idled for 3 minutes.

cardiagn.com

MONITOR STRATEGY

Related DTCs	P0011: Advanced Camshaft Timing P0012: Retarded Camshaft Timing
Required Sensors/Components (Main)	VVT OCV and VVT Actuator
Required Sensors/Components (Related)	Crankshaft position sensor, Camshaft position sensor and Engine coolant temperature sensor
Frequency of Operation	Once per driving cycle
Duration	Within 10 seconds
MIL Operation	P0011: Immediate P0012: 2 driving cycles
Sequence of Operation	None

TYPICAL ENABLING CONDITIONS

The monitor will run whenever these DTCs are not present	P0100, P0102, P0103 (MAF sensor), P0115, P0117, P0118 (ECT sensor), P0125 (Insufficient ECT for closed loop), P0335 (CKP sensor), P0340, P0341 (CMP sensor), P0351, P0352, P0353, P0354 (Igniter)
Battery voltage	11 V or more
Throttle position learning	Completed
Engine RPM	550 to 4,000 rpm
Engine coolant temperature	75 to 100°C (167 to 212°F)

TYPICAL MALFUNCTION THRESHOLDS

P0011:

Deviation of valve timing	More than 5°CA (Crankshaft angle)
Valve timing	No change at advanced valve timing

P0012:

Deviation of valve timing	More than 5°CA (Crankshaft angle)
Valve timing	No change at retarded valve timing

If the difference between the target and actual camshaft timings is greater than the specified value, the ECM operates the VVT (Variable Valve Timing) actuator.
Then, the ECM monitors the camshaft timing change for 5 seconds.

WIRING DIAGRAM

Refer to DTC P0010 (See page ES-46).

INSPECTION PROCEDURE

NOTICE:

DTC P0011 or P0012 may be set when foreign objects in the engine oil are caught in some parts of the system. The DTC will remain set even if the system returns to normal after a short time. Foreign objects are filtered out by the oil filter.

HINT:

Read freeze frame data using an intelligent tester or OBD II scan tool. The ECM records vehicle and driving condition information as freeze frame data the moment a DTC is stored. When troubleshooting, freeze frame data can be helpful in determining whether the vehicle was running or stopped, whether the engine was warmed up or not, whether the air/fuel ratio was lean or rich, as well as other data recorded at the time of a malfunction.

cardiagn.com

When using intelligent tester:

1	CHECK ANY OTHER DTCS OUTPUT (IN ADDITION TO DTC P0011 OR P0012)

(a) Connect an intelligent tester to the DLC3.
(b) Turn the ignition switch to ON and turn the tester ON.
(c) Select the following menu items: DIAGNOSIS / ENHANCED OBD II / DTC INFO / CURRENT CODES.
(d) Read DTCs.

Result

Display (DTC Output)	Proceed to
P0011 or P0012	A
P0011 or P0012 and other DTCs	B

HINT:
If any DTCs other than P0011 or P0012 are output, troubleshoot those DTCs first.

B → **GO TO DTC CHART**

A

2	PERFORM ACTIVE TEST BY INTELLIGENT TESTER (OPERATE OCV)

(a) Connect the intelligent tester to the DLC3.
(b) Start the engine and turn the tester ON.
(c) Warm up the engine.
(d) On the tester, select the following menu items: DIAGNOSIS / ENHANCED OBD II / ACTIVE TEST / VVT CTRL B1.
(e) Check the engine speed while operating the Oil Control Valve (OCV) using the tester.

OK

Tester Operations	Specified Conditions
OCV OFF	Normal engine speed
OCV ON	Engine idles roughly or stalls (soon after OCV switched from OFF to ON)

NG → **Go to step 4**

OK

3	CHECK WHETHER DTC OUTPUT RECURS (DTC P0011 OR P0012)

(a) Connect the intelligent tester to the DLC3.
(b) Turn the ignition switch to ON and turn the tester ON.
(c) Clear DTCs (See page ES-30).
(d) Start the engine and warm it up.
(e) Switch the ECM from normal mode to check mode using the tester (See page ES-31).
(f) Drive the vehicle for more than 10 minutes.
(g) Read DTCs using the tester.

cardiagn.com

OK:
No DTC output.

OK → **END**

NG

4 CHECK VALVE TIMING (CHECK FOR LOOSE AND JUMPED TEETH ON TIMING CHAIN)

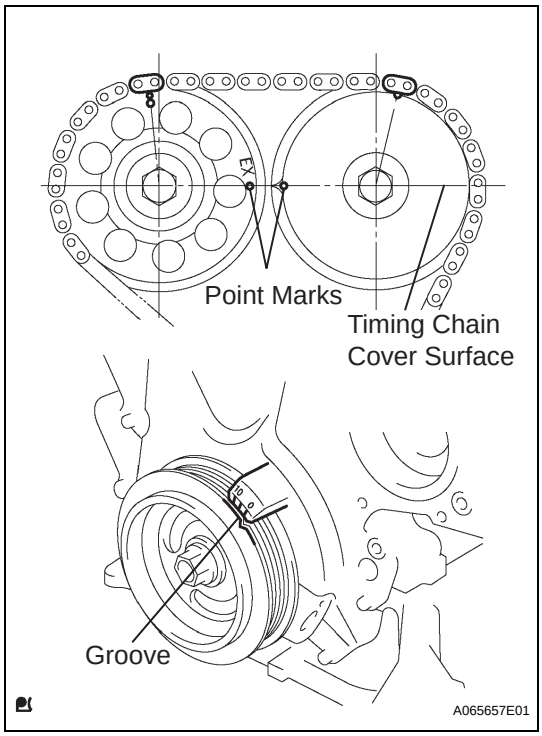

(a) Remove the cylinder head cover (See page EM-44).
(b) Turn the crankshaft pulley, then align its groove with the timing mark "0" on the timing chain cover.
(c) Check that the point marks on the camshaft timing gears are aligned with the timing chain cover surface as shown in the illustration.
If not, turn the crankshaft 1 revolution (360°), then align the marks as above.
OK:
Point marks on camshaft timing gears are aligned with timing chain cover surface.
(d) Reinstall the cylinder head cover (See page EM-63).

NG → **ADJUST VALVE TIMING**

OK

5 INSPECT CAMSHAFT TIMING OIL CONTROL VALVE ASSEMBLY (OCV)

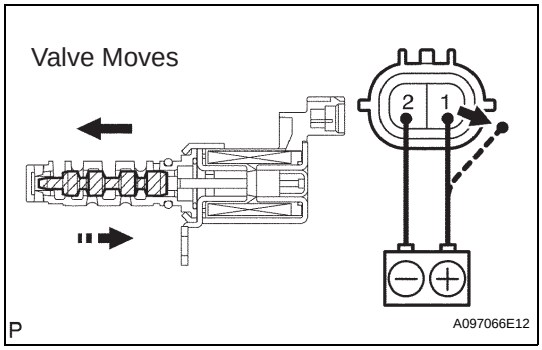

(a) Remove the OCV.
(b) Measure the resistance between the terminals of the OCV.
Standard resistance:
6.9 to 7.9 Ω at 20°C (68°F)
(c) Apply the positive battery voltage to terminal 1 and negative battery voltage to terminal 2. Check the valve operation.
OK:
Valve moves quickly.
(d) Reinstall the OCV.

NG → **REPLACE CAMSHAFT TIMING OIL CONTROL VALVE ASSEMBLY**

OK

cardiagn.com

6	INSPECT OIL CONTROL VALVE FILTER

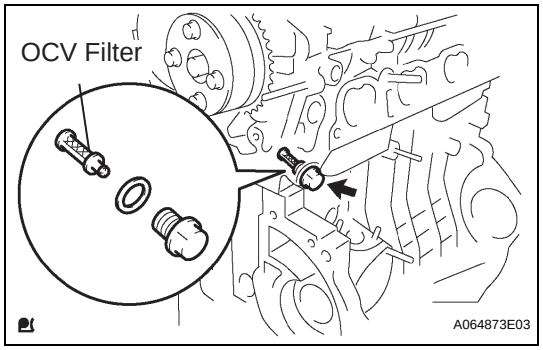

(a) Remove the generator (See page CH-6).
(b) Remove the OCV filter (See page EM-112).
(c) Check that the filter is not clogged.
OK:
Filter is not clogged.
(d) Reinstall the OCV filter (See page EM-145).
(e) Reinstall the generator (See page CH-14).

NG → **CLEAN OIL CONTROL VALVE FILTER**

OK

7	REPLACE CAMSHAFT TIMING GEAR ASSEMBLY

NEXT

8	CHECK WHETHER DTC OUTPUT RECURS

(a) Connect the intelligent tester to the DLC3.
(b) Turn the ignition switch to ON and turn the tester ON.
(c) Clear DTCs (See page ES-30).
(d) Start the engine and warm it up.
(e) Switch the ECM from normal mode to check mode using the tester (See page ES-31).
(f) Drive the vehicle for more than 10 minutes.
(g) Confirm that no DTC is set using the tester.
OK:
No DTC output.
HINT:
DTC P0011 or P0012 is output when foreign objects in engine oil are caught in some parts of the system. These codes will stay registered even if the system returns to normal after a short time. These foreign objects are than captured by the oil filter, thus eliminating the source of the problem.

NG → **REPLACE ECM**

OK

END

When Using OBD II Scan Tool:

1	CHECK ANY OTHER DTCS OUTPUT (IN ADDITION TO DTC P0011 OR P0012)

(a) Connect an OBD II scan tool to the DLC3.

ES

cardiagn.com

(b) Turn the ignition switch to ON and turn the scan tool ON.
(c) Read DTCs using the scan tool.

Result

Display (DTC Output)	Proceed to
P0011 or P0012	A
P0011 or P0012 and other DTCs	B

HINT:
If any DTCs other than P0011 or P0012 are output, troubleshoot those DTCs first.

B → **GO TO DTC CHART**

ES

A

2 CHECK OIL CONTROL VALVE OPERATION

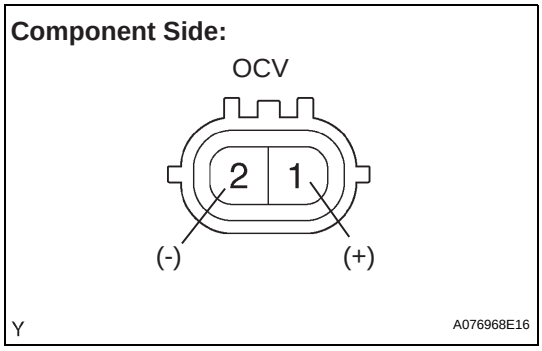

(a) Start the engine.
(b) Check the engine idling condition twice, when conditions (1) and (2) below are met.
  (1) The C2 Oil Control Valve (OCV) connector is disconnected (Condition (1)).
  (2) The battery voltage is applied between the terminals of the OCV (Condition (2)).
  Result

Conditions	Engine Idling	Engine Idling
(1)	Normal	Other than indicated on left
(2)	Rough, or engine stalls	Other than indicated on left
Proceed to	A	B

(c) Reconnect the OCV connector.

B → **Go to step 5**

A

3 CHECK WHETHER DTC OUTPUT RECURS (DTC P0011 OR P0012)

(a) Connect the OBD II scan tool to the DLC3 (Procedure "A").
(b) Turn the ignition switch to ON and turn the scan tool ON (Procedure "B").
(c) Clear DTCs (See page ES-30) (Procedure "C").
(d) Start the engine and warm it up (Procedure "D").
(e) Drive the vehicle for more than 10 minutes (Procedure "E").
(f) Turn the ignition switch OFF, and then repeat procedure "D" and "E" above (Procedure "F").
(g) Read DTCs using the scan tool (Procedure "G").
  OK:
  No DTC output.

cardiagn.com

HINT:
DTC P0011 or P0012 may be set when foreign objects in the engine oil are caught in some parts of the system. The DTC will remain set even if the system returns to normal after a short time. Foreign objects are filtered out by the oil filter.

OK → **SYSTEM OK**

NG

4	CHECK HARNESS AND CONNECTOR (CAMSHAFT TIMING OIL CONTROL VALVE(OCV) - ECM)

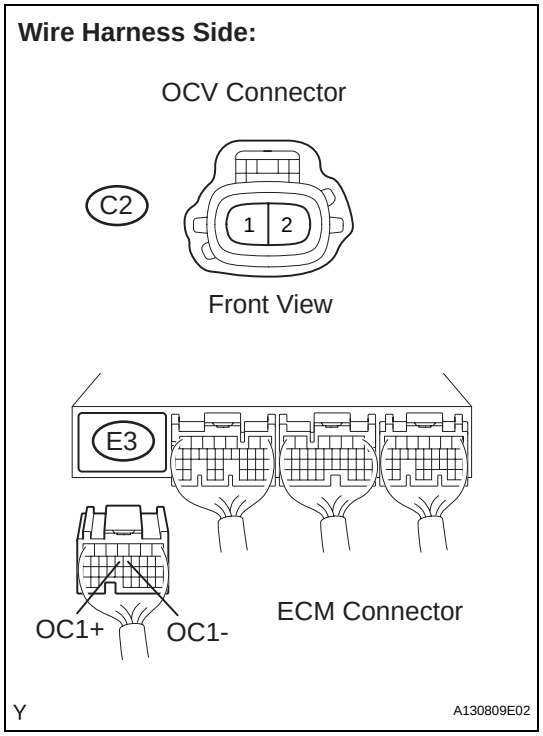

(a) Disconnect the C2 OCV connector.
(b) Disconnect the E3 ECM connector.
(c) Check the resistance.

Standard resistance (Check for open)

Tester Connections	Specified Conditions
OCV (C2-1) - OC1+ (E3-13)	Below 1 Ω
OCV (C2-2) - OC1- (E3-12)	Below 1 Ω

Standard resistance (Check for short)

Tester Connections	Specified Conditions
OCV (C2-1) or OC1+ (E3-13) - Body ground	10 kΩ or higher
OCV (C2-2) or OC1- (E3-12) - Body ground	10 kΩ or higher

(d) Reconnect OCV connector.
(e) Reconnect ECM connector.

NG → **REPAIR OR REPLACE HARNESS OR CONNECTOR**

OK

ES

cardiagn.com

ES

5	CHECK VALVE TIMING (CHECK FOR LOOSE AND JUMPED TEETH ON TIMING CHAIN)

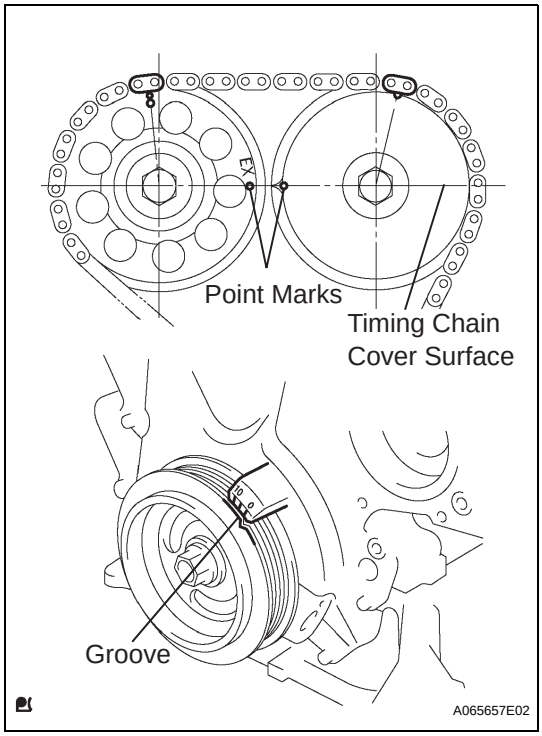

(a) Remove the cylinder head cover (See page EM-44).
(b) Turn the crankshaft pulley, then align its groove with the timing mark "0" on the timing chain cover.
(c) Check that the point marks on the camshaft timing gears are aligned with the timing chain cover surface as shown in the illustration.
If not, turn the crankshaft 1 revolution (360°), then align the marks as above.
OK:
Point marks on camshaft timing gears are aligned with timing chain cover surface.
(d) Reinstall the cylinder head cover (See page EM-63).

NG → **ADJUST VALVE TIMING**

OK

6	INSPECT OIL CONTROL VALVE FILTER

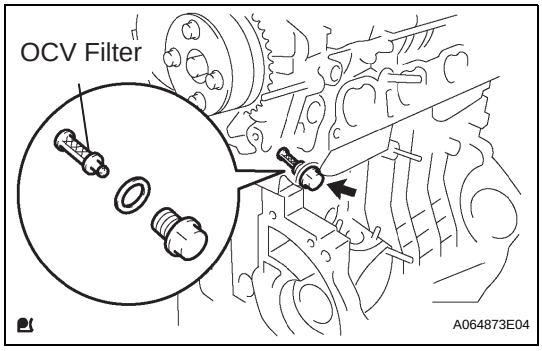

(a) Remove the generator (See page CH-6).
(b) Remove the OCV filter (See page EM-112).
(c) Check that the filter is not clogged.
OK:
Filter is not clogged.
(d) Reinstall the OCV filter (See page EM-145).
(e) Reinstall the generator (See page CH-14).

NG → **CLEAN OIL CONTROL VALVE FILTER**

OK

cardiagn.com

7	INSPECT CAMSHAFT TIMING OIL CONTROL VALVE ASSEMBLY (OCV)

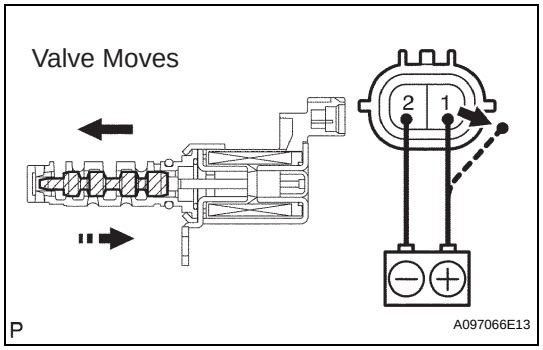

(a) Remove the OCV.
(b) Measure the resistance between the terminals of the OCV.
Standard resistance:
6.9 to 7.9 Ω at 20°C (68°F)
(c) Apply the positive battery voltage to terminal 1 and negative battery voltage to terminal 2. Check the valve operation.
OK:
Valve moves quickly.
(d) Reinstall the OCV.

OK → **Go to step 9**

NG

8	REPLACE CAMSHAFT TIMING OIL CONTROL VALVE ASSEMBLY (OCV)

NEXT

9	INSPECT CAMSHAFT TIMING GEAR ASSEMBLY

(a) Inspect the camshaft timing gear assembly (See page EM-32).
OK:
Camshaft timing gear rotates smoothly when pressure is applied.

OK → **Go to step 11**

NG

10	REPLACE CAMSHAFT TIMING GEAR ASSEMBLY

NEXT

11	CHECK WHETHER DTC OUTPUT RECURS (DTC P0011 OR P0012)

(a) Connect the OBD II scan tool to the DLC3 (Procedure "A").
(b) Turn the ignition switch to ON and turn the scan tool ON (Procedure "B").
(c) Clear DTCs (See page ES-30) (Procedure "C").
(d) Start the engine and warm it up (Procedure "D").
(e) Drive the vehicle for more than 10 minutes (Procedure "E").
(f) Turn the ignition switch OFF, and then repeat procedures "D" and "E" above (Procedure "F").

cardiagn.com

(g) Read DTCs using the scan tool (Procedure "G").
OK:
No DTC output.
HINT:
DTC P0011 or P0012 may be set when foreign objects in the engine oil are caught in some parts of the system. The DTC will remain set even if the system returns to normal after a short time. Foreign objects are filtered out by the oil filter.

OK → **SYSTEM OK**

NG

REPLACE ECM

cardiagn.com